GERMAN POOL 德國寶

嵌入式微波爐
Built-In Microwave Oven
MVG-1712

在使用之前請詳細閱讀「使用說明書」及「保用條例」，並妥為保存。

Please read these instructions and warranty information carefully before use and keep them handy for future reference.

SGS GS Geprüfte Sicherheit CE

使 用 說 明 書 OPERATING INSTRUCTIONS

如欲獲取更多有關本產品最新資訊及食譜，歡迎瀏覽本公司網站。
For additional product information and cooking recipes, please visit our website.

w w w . g e r m a n p o o l . c o m

Table of Contents

Notice Before Use	04
Installation Instructions	05
Microwave Cooking Principles	06
Utensil Guide	06
Product Structure	07
Control Panel	08
Operating Instructions	09
Care & Maintenance	11
Technical Specifications	22
Warranty Terms & Conditions	23

For Chinese instructions, please refer to P.12.
中文版説明書請參閱 P.12。

Notice Before Use

IMPORTANT

For safety purpose, you should read the instructions carefully before using the appliance for the first time. Save the instructions for future reference.

The appliance is designed for domestic use and may only be installed and operated in accordance with these instructions for use.

1. Do not allow children to operate the oven without supervision. The oven must not be unattended at any time during operation.

2. Use this appliance only for its intended use as described in this manual. Do not use corrosive chemicals or vapors in this appliance. This type of oven is specifically designed to heat, cook or dry food. It is not designed for industrial or laboratory use.

3. Do not operate the oven when it is empty.

4. Do not operate this appliance: if its cord or plug is damaged, if it is not working properly or if it has been damaged or dropped. If the supply cord is damaged, it must be replaced by German Pool-authorized or licensed technicians in order to avoid hazards.

5. To reduce the risk of fire in the oven cavity:
   - When heating food in plastic or paper container, keep an eye on the oven frequently due to the possibility of ignition.
   - Remove wire twist-ties from paper or plastic bags before placing bag in oven.
   - If smoke is observed, switch off or unplug the appliance and keep the door closed in order to stifle any flames.
   - Do not use the cavity for storage purposes. Do not leave paper products, cooking utensils or food in the cavity when the oven is not in use.

6. Liquid or other food must not be heated in sealed containers since they are liable to explode.

7. Microwave heating of beverage can result in delayed eruptive boiling, therefore care has to be taken when you handle the container.

8. Do not fry food in the oven. Hot oil can damage oven parts and utensils and even result in skin burns.

9. Eggs in their shell and whole hard-boiled eggs should not be heated in microwave ovens since they may explode even after microwave heating has ended.

10. Pierce foods with heavy skins such as potatoes, whole squashes, apples and chestnuts before cooking.

11. The contents of feeding bottles and baby jars should be stirred or shaken and the temperature should be checked before serving in order to avoid burns.

12. Cooking utensils may become hot because of heat transferred from the heated food. Potholders may be needed to handle the utensil.

13. Utensils should be checked to ensure that they are suitable for use in microwave oven.

14. It is hazardous for anyone other than a trained technician to carry out any service or repair operation which involves the removal of any cover which gives protection against exposure to microwave energy.

Notice Before Use

15. To avoid possible exposure to excessive microwave energy:
    - Do not attempt to operate this oven with the door open since open-door operation can result in harmful exposure to microwave energy. It is important not to defeat or tamper with the safety interlocks.
    - Do not place any object between the oven front face and the door or allow soil or cleaner residue to accumulate on sealing surfaces.
    - Do not operate the oven if it is damaged. It is particularly important that the oven door close properly and that there is no damage to the:
      - Door (bent)
      - Hinges and latches (broken or loosened)
      - Door seals and sealing surfaces
    - The oven should not be adjusted or repaired by anyone except properly qualified techincians.

Installation Instructions

1. Make sure that all the packing materials are removed from the interior of the oven.

2. WARNING: Check the oven for any damage, such as misaligned or bent door, damaged door seals and sealing surface, broken or loose door hinges and latches, and dents inside the cavity or on the door. If there is any damage, do not operate the oven. Contact qualified technicians for repair.

3. This microwave oven must be placed on a flat, stable surface to hold its weight and the heaviest food likely to be cooked in the oven.

4. Do not place the oven where heat, moisture, or high humidity are generated, or near combustible materials.

5. For correct operation, the oven must have sufficient airflow. Allow 20 cm of space above the oven, 10 cm at the back and 5 cm at both sides. Do not cover or block any openings on the appliance. Do not remove feet.

6. Do not operate the oven without glass tray, roller support, and shaft in their proper positions.

7. Make sure that the power supply cord is undamaged and does not run under the oven or over any hot or sharp surface.

8. The socket must be readily accessible so that it can be easily unplugged in an emergency.

9. Do not use the oven outdoors.

Grounding Instructions

1. This appliance must be grounded.

2. This oven is equipped with a cord having a grounding wire with a grounding plug.

3. It must be plugged into a wall receptacle that is properly installed and grounded.

4. It is recommended to provide a separate circuit serving only the oven. Using a high voltage is dangerous and may result in a fire or other accidents causing oven damage.

WARNING: Improper use of the grounding plug can result in a risk of electric shock. If you have any questions about the grounding or electrical instructions, consult a qualified technician.

Microwave Cooking Principles

1. Arrange food carefully. Place the thickest areas towards edge of dish.

2. Watch cooking time. Cook for the shortest amount of time indicated and add more as needed. Food severely overcooked can smoke or ignite.

3. Cover food while cooking. Covers prevent spattering and facilitate food to be cooked evenly.

4. Turn food over once during microwave cooking to speed up cooking of such foods as chicken and hamburgers. Large items like roasts must be turned over at least once.

5. Rearrange food such as meatballs halfway through cooking both from top to bottom and from the center of the dish to the edge.

Utensil Guide

1. The ideal material for a microwave utensil is transparent to microwave, as it allows energy to pass through the container and heat the food.

2. Microwave cannot penetrate metal, so metal utensils or dishes with metallic trim should not be used.

3. Do not use recycled paper products during microwave cooking, as they may contain small metal fragments which may cause sparks and/or fire.

4. Round /oval dishes rather than square/oblong ones are recommended, as food in corners tends to overcook.

The list below is a general guide to help you select the correct utensils.

COOKWARE	MICROWAVE
Heat-Resistant Glass	Yes
Non Heat-Resistant Glass	No
Heat-Resistant Ceramics	Yes
Microwave-Safe Plastic Dish	Yes
Kitchen Paper	Yes
Metal Tray	No
Metal Rack	No
Aluminum Foil & Foil Containers	No

Product Structure

Body

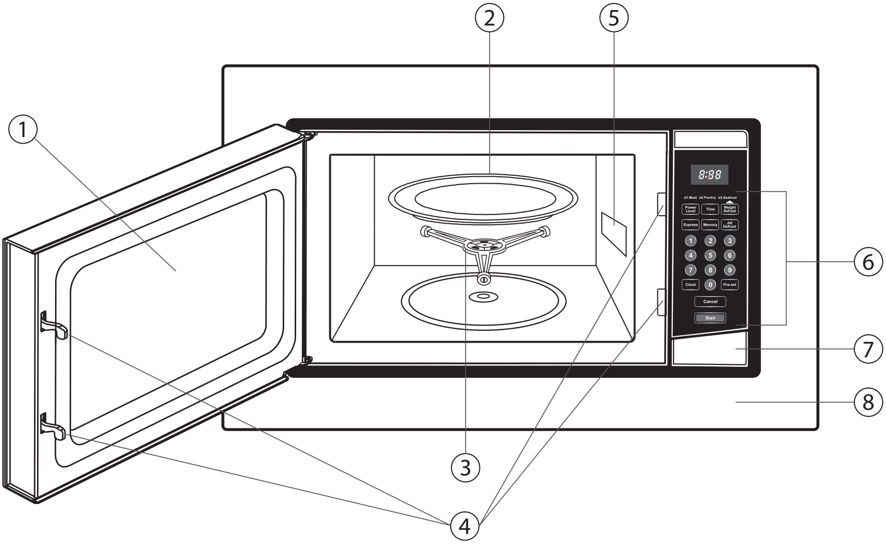

1. Oven Window
2. Glass Tray
3. Roller Ring
4. Door Safety Lock
5. Wave Guide
   (Please do not remove the mica plate covering the wave guide)
6. Control Panel
7. Door Release Button
8. Built-in Frame

Control Panel

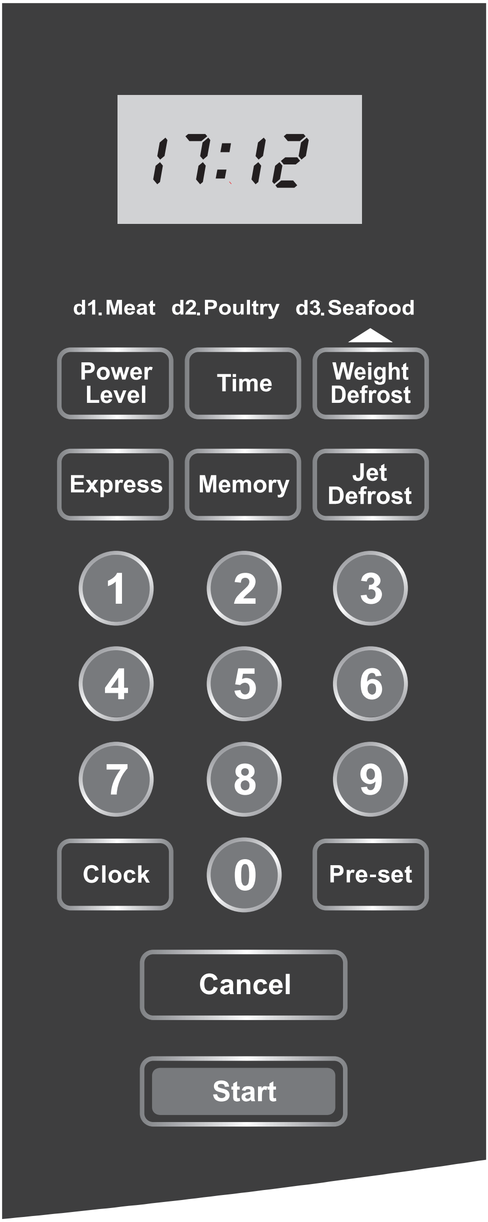

Display
Cook time, power level, cooking status and clock time are displayed.

Power Level
Press to set power level.

Time
Press to set cooking time.

Weight Defrost
Automatically set defrosting cycle based on the weight of the foods to be defrosted.

Express
Press to start cooking at 100% power level quickly.

Memory
Press to set a multi-stage cooking program.

Jet Defrost
Press to defrost quickly based on the cooking time you entered.

Number Pads
Press to enter time, power or food weight.

Clock
Press to set the digital clock.

Pre-set
Press to set the oven to start at a later time.

Cancel (Lock)
Press to clear previous programmes and set child-proof lock function.

Start
Press to start cooking program.

Setting the clock

The clock works in 12-hour cycle.

For example: to set the time of 6:00 (AM or PM):

1. Press【Clock】button.
2. Press【Cancel】button.
3. Press number pads to set the clock time.
4. Press【Clock】button again to confirm.

While cooking is in progress, you can check the clock time by pressing the【Clock】button.

Regular Cooking

To cook with microwave, time and power level should be set.

1. Press【Power Level】button once.
2. Press number pads to set the power. There are 11 power levels.
3. Press【Time】button once.
4. Press number pads to set a cooking time. The longest time is 99 min and 99 sec.
5. Press【Start】to confirm.

PRESS	POWER LEVEL
1,0	100% (P10)
9	90% (P9)
8	80% (P8)
7	70% (P7)
6	60% (P6)
5	50% (P5)
4	40% (P4)
3	30% (P3)
2	20% (P2)
1	10% (P1)
0	0% (P0)

NOTE:
You can press【Power Level】button to check present power level during cooking.

Express

By pressing the【Express】button, you can select from four cooking times (15 sec, 30 sec, 1 min or 2 min) for the oven to work at full power level.

Suppose you want to set the oven to cook for 1 min at 100% power level.

1. Press【Express】button several times until "1:00" appears in the display.
2. Press【Start】button.

Weight Defrost

The oven can defrost meat, poultry, and seafood. The time and the defrosting power are adjusted automatically once you have entered the weight of food.

The maximum allowable weight for each category is shown below.

FOOD CATEGORY	MAXIMUM WEIGHT	DISPLAY
Meat	2300g	d1
Poultry	4000g	d2
Seafood	900g	d3

Suppose you want to defrost 600g shrimp.

1. Place food to be defrosted into the oven.
2. Press【Weight Defrost】button for 3 times. "d3" will appear in the display.
3. Press number pads to enter food weight.
4. Press【Start】button.

NOTE:
During defrosting program, the system will pause and beep to remind you to turn food over, then close the door and press【Start】to resume defrosting.

Jet Defrost

With Jet Defrost, you need to input defrosting time. The longest defrosting time is 99 min and 99 sec.

Suppose you want to set the oven to Jet Defrost for 5 min and 30 sec.

1. Press【Jet Defrost】button once.
2. Press number pads to enter defrosting time.
3. Press【Start】button.

NOTE:
During defrosting program, the system will pause and beep to remind you to turn food over, then close the door and press【Start】to resume defrosting.

Multi-stage Cooking

The oven can be programmed to do several consecutive functions.

NOTE:
Jet Defrost can only be set in the first stage. Express and Weight Defrost function cannot be set in this program.

Suppose you want to set the following cooking program:

① Jet Defrost;
② 100% power cooking for 5 min;
③ 50% power cooking for 10 min

1. Input Jet Defrost program.
2. Press【Memory】button.
3. Input the regular cooking program for 5 min at 100% power level.
4. Press【Memory】button.
5. Input microwave cooking program for 10 min at 50% power level.
6. Press【Start】button.

Pre-set

Pre-set function allows the oven to start up at a later time within the oven's clock cycle (12 hours).

Suppose you want the oven to start cooking at 12:00 for 10 min.

1. Place food into the oven.
2. Press【Power Level】button.
3. Press number pads to input desired power level.
4. Press【Time】button.
5. Press number pads to input desired cooking time.
6. Press【Pre-set】button.
7. Press number pads to enter desired starting time, 12:00.
8. Press【Start】button to confirm.

NOTE:
After the pre-set function is set, you can check the pre-set status by pressing【Pre-set】button. You can also press【Cancel】to stop the pre-set function.

Child Lock

This function is used to prevent unsupervised operation of the oven by little children. The “LOCK” indicator will show on display screen, and the oven cannot be operated while the Child Lock is set.

To set:
Press and hold the【Cancel】button for 3 sec, a beep will be heard and the “LOCK” indicator lights.

To cancel:
Press and hold the【Cancel】button for 3 sec until the “LOCK” indicator on display turns off.

Care & Maintenance

NOTICE

Do not use hard or abrasive substances, such as powerful cleansing agent, benzine and metal brush, to clean any part of the oven.

1. Turn off the oven and remove the power plug from the socket before cleaning.
2. Keep the inside of the oven clean. When food splatters or spilled liquids adhere to oven walls, door, window, door seals and the adjacent parts, wipe with a damp cloth. Mild detergent may be used if the oven gets very dirty. Avoid the use of spray and other harsh cleaners as they may stain, streak or dull the door surface.
3. The outside surfaces should be cleaned with a damp cloth. To prevent damage to the operating parts inside the oven, water should not be allowed to seep into the ventilation openings.
4. Do not allow the control panel to become wet. Clean with a soft, damp cloth. When cleaning the control panel, leave oven door open to prevent oven from accidentally turning on.
5. If steam accumulates inside or around the outside of the oven door, wipe with a soft cloth. This may occur when the microwave oven is operated under high humidity condition. And it is normal.
6. It is occasionally necessary to remove the glass tray for cleaning. Wash the tray in warm sudsy water or in a dishwasher.
7. The roller ring and oven floor should be cleaned regularly to avoid excessive noise. Simply wipe the bottom surface of the oven with mild detergent. The roller ring may be washed in mild sudsy water or dishwasher. When removing the roller ring from cavity floor for cleaning, be sure to replace in the proper position.
8. Remove odors from your oven by mixing a cup of water with the juice and skin of one lemon in a deep microwaveable bowl, microwave for 5 minutes. Wipe thoroughly and dry with a soft cloth.
9. When it becomes necessary to replace the oven light, please consult a dealer to have it replaced.
10. The oven should be cleaned regularly and any food deposits removed. Failure to maintain the oven in a clean condition could lead to deterioration of the surface, and this could adversely affect the life of the appliance and possibly result in a hazardous situation.
11. When the oven malfunctions, contact German Pool Customer Service Centre to repair.

Repair Instructions

WARNING

The oven must be repaired by qualified technicians and the below instructions have to be followed when repairing:

1. Beware of microwave energy. Do not expose yourself to the radiation given out by microwave generator or parts of the microwave oven.

Beware of the parts listed below (they may have over 250V and be easily detachable)
Magnetron, high-voltage transformer, high-voltage capacitor, high-voltage diode and high-voltage fuse.
Situations that may lead to over-release of microwave energy
1. Magnetron is not installed on wave guide properly. 2. Oven door is not properly installed to the hinge, and door hinge is not properly installed. 3. Bracket for opening or closing is not properly installed. 4. Door, door seal or the case is damaged.

2. Use the specific models of oven lamp and power cord from German Pool, when they need to be replaced.

目錄

注意事項	13
安裝說明	15
微波爐使用常識	16
適用器皿	16
產品結構	17
操作面板	18
操作說明	19
清潔與保養	21
常見事故及處理	22
技術規格	22
保用條款	23

注意事項

重要說明

– 為安全起見，初次使用產品前請先細閱本説明書，並保存説明書，以便作參考之用。

– 本產品只供家居使用。請必須依照本説明書內的指示安裝及操作。

1. 切勿讓兒童獨自操作使用本產品，亦不可在無人看管下使用本產品煮食。

2. 爐內無食物時，切勿使用微波爐。

3. 如電源線或插頭損壞或不能正常運作，切勿繼續操作微波爐。如電源線損壞，必須由製造商、其維修部或其他專業人員更換，以免發生危險。

4. 為免爐腔生火：
   – 當食物在塑膠、紙或其他可燃材料製成的容器中加熱或烹調時，應時刻注意，防止起火。
   – 將紙或膠袋放入微波爐前，必須先除去電線扎口線。
   – 若烹調中發生冒煙或起火現象，請不要立刻打開爐門，否則遇空氣會加大火勢，應立即切斷電源，並拔除插頭。
   – 切勿使用微波爐儲存任何物品。微波爐不操作時，切勿將紙製品及廚房器皿放於爐內。

5. 不要直接加熱裝在密封容器內的液體或其他食物，因為這樣有可能發生爆炸。

6. 以微波爐加熱飲料有可能引致熱力被鎖於液體之中，以至內部液體沸騰爆破。因此，處理內有液體的容器時必須小心。

7. 切勿用微波爐煎炸食物。滾油會損壞微波爐零件及器皿，並可能引致皮膚燒傷。

8. 奶瓶及嬰兒食品罐應經過攪拌或搖動，餵食前應檢查瓶內食物的溫度，避免燙傷。

9. 從微波爐內提取食物和器皿時，應當使用鍋夾或戴上隔熱手套，以免高溫燙傷。

10. 使用前，應檢查所用器皿是否適用於微波爐。

11. 為防止轉盤受損壞，注意轉盤的最大負載重量不能超過5 kg。

12. 必須由合資格的維修人員執行檢修操作，包括拆下防止微波能量洩漏的防護蓋等。其他人切勿執行檢修，因為這是非常危險的。

13. 用微波爐燒開水時要盡量使用無蓋的寬口容器。如要加入咖啡粉、奶粉、麥片或其他沖劑，必須先對開水進行攪拌或擱置幾分鐘至稍涼，以免水沸騰而被燙傷。

注意事項

14. 必須注意放入微波爐內之食物，要點如下：

- 切勿煮帶殼蛋，壓力會使蛋爆裂。另外蛋黃、蛋白也要用牙籤刺穿數次。
- 已煮好的湯圓或荷包蛋等，馬上取出可能會造成其內部液體沸騰爆破而濺傷人體。注意應打開爐門後，擱置一會兒，再取出食用。
- 表面無孔的食物(如蛋、栗子、馬鈴薯、香腸等)，請去皮或在外皮上開一裂縫或叉幾個小孔，否則受熱膨脹，可能發生爆裂。
- 皮厚且硬的食物，如整個南瓜、蘋果和栗子，烹煮前需刺幾個小孔。
- 魚丸等食物在烹調至一半時，宜重新對換位置，如上下對調，中間部分則與旁邊對換。
- 請將食物小心排列，較厚部分應朝盤外擺放。
- 煮食時間不宜過長，因為煮食不足可繼續，而過度則無法補救。食物嚴重過度烹調會造成冒煙或燃燒等危險。
- 烹調食譜所提供的是烹調的大約時間，影響烹調時間的因素包括：所喜歡的煮熟程度，食物初時的溫度、形狀大小、份量，使用器皿的形狀、大小，以及食物的排列、遮蓋、翻攪等。請適當修正烹調時間。
- 在進行微波烹調時翻轉食物，能使食物更快煮熟，如雞肉和漢堡包。體積較大的烤肉則須至少翻轉一次。
- 烹調食物時應蓋著，加蓋可防止食物噴濺，而且食物更均勻熟透。
- 不可用微波爐煎炸食物。

15. 為了避免人體接觸微波能量：

- 操作時切勿打開爐門，以免人體接觸微波能量。並注意切勿損毀爐門安全聯鎖開關。
- 切勿於微波爐的前方與爐門之間放置任何物品，並切勿讓污物積聚於密封墊表面。
- 切勿使用損壞了的微波爐，必須確保爐門能夠緊緊鎖上，而且並無以下的部件損毀情況：
  - 爐門（扭曲）
  - 鉸位及門閂（損壞或鬆脫）
  - 門封及密封墊（破壞）
- 微波爐如有損壞，必須由合資格技術人員維修。

安裝說明

1. 將微波爐內的包裝物全部取出。

2. 查看微波爐有否損壞，例如爐門扭曲、門封與密封墊表面損毀、鉸位及門閂損壞或鬆開，及爐腔凹陷。如有損壞，請立刻聯絡本公司維修部或合資格技術人員。

3. 將微波爐放置於有足夠承托力的水平面上。

4. 本微波爐應在通風乾爽、無腐蝕性氣體的環境中使用，遠離高溫及蒸氣。

5. 為確保正常運作，必須保持微波爐周圍空氣流通。切勿在爐頂放置任何物件，並保持與頂部壁櫃距離至少20厘米。微波爐兩旁應與牆壁距離至少5厘米，爐背應與牆壁至少距離10厘米。切勿拆除爐腳。

6. 使用時必須先妥為放入轉盤承托及玻璃轉盤，再將盛好食物的器皿放在玻璃轉盤上進行烹調。

7. 確保電源線沒有損毀，並且沒有被壓在爐底或被放置於熱或尖物表面。

8. 電源插頭必須放於容易接觸的位置，以便於緊急時拔掉。

9. 切勿於戶外使用本微波爐。

警告：為了防止觸電，必須確保此微波爐接地良好。

微波爐使用常識

下列情況均屬正常

現象	原因
微波爐燈光暗弱。	烹調時若不以微波高火而用較低的火力烹調，微波爐的燈光會變得暗弱並有聲響產生，這是微波爐在控制火力時所產生的正常現象。
蒸汽凝聚在爐門及有熱風從排氣口排出。	烹調時，食物會有蒸汽散發，而大部分會從排氣口排出，但蒸汽也會在較涼的地方如爐門上凝聚，這是正常現象。
電壓波動，會影響烹調時間及效果。	當電壓波動時，微波爐仍能運作，只是受電壓偏高或偏低的影響，輸出功率會相應升高或降低，故烹調時間及效果會有所變化，這是屬於正常現象。

適用器皿

注意：
根據不同烹調方式，選用合適的器皿十分重要。如果選擇不當，不僅會影響烹調效果，而且還會造成損壞器皿或微波爐的不良後果。

1. 最理想的微波爐器皿必須能透射微波，使能量穿透容器，加熱容器中的食物。

2. 微波無法穿透金屬，因此不宜使用金屬器皿或金屬飾邊的餐具。

3. 切勿使用再迴圈紙製品進行微波烹調，因為它們含細微的金屬碎片，可能引致火花和/或著火燃燒。

4. 比之四方形/長方形，圓形/橢圓形餐具更適合微波爐使用，因為在角落的食物通常會過熟。

5. 可用寬度較小的鋁箔鋪蓋食物，以防止外露的食物過熟。但必須注意，不可使用過量，同時在鋁箔和爐腔之間保持至少1寸（2.54釐米）的距離。

6. 下表中“○”號為適用，“X”為不適用。

器皿	微波烹調
耐熱玻璃	○
不耐熱玻璃	X
耐熱陶瓷器	○
微波爐安全使用塑膠餐具	○
保鮮膜	○
金屬烤盤	X
金屬架子	X
鋁箔及箔紙容器	X

產品結構

結構說明

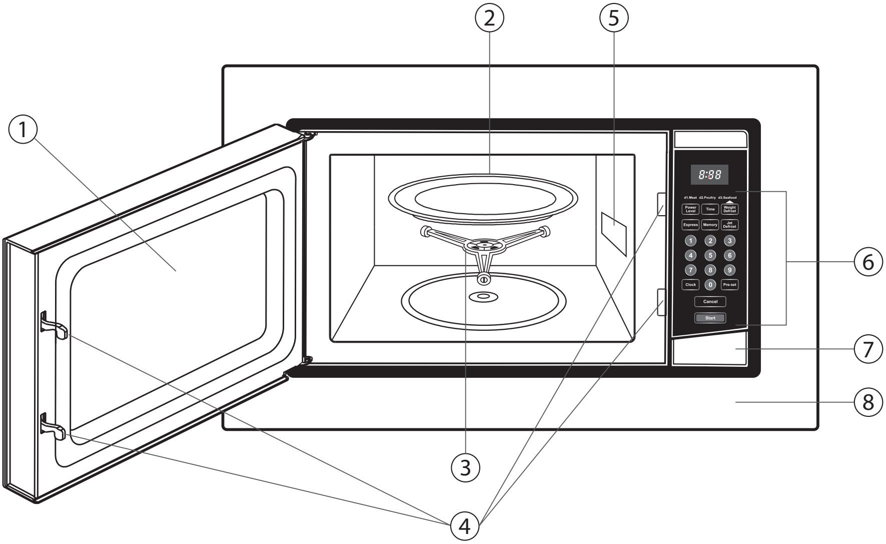

1. 視屏窗
鏡面玻璃視屏窗

2. 玻璃轉盤
裝好食物的容器放在轉盤上，加熱時轉盤轉動，使食物烹調均勻，以達到理想均勻烹調的效果

3. 轉盤支承
支承玻璃轉盤並按其軌道轉動

4. 爐門安全聯鎖開關
確保爐門與爐腔緊密接觸

5. 波導口
磁控管發射的微波進入爐腔的通道（裝有雲母片，切勿拆卸）

6. 操作面板
詳見控制面板說明

7. 爐門開關
按此開關，爐門打開

8. 專用外框
作嵌入式安裝時使用

操作面板

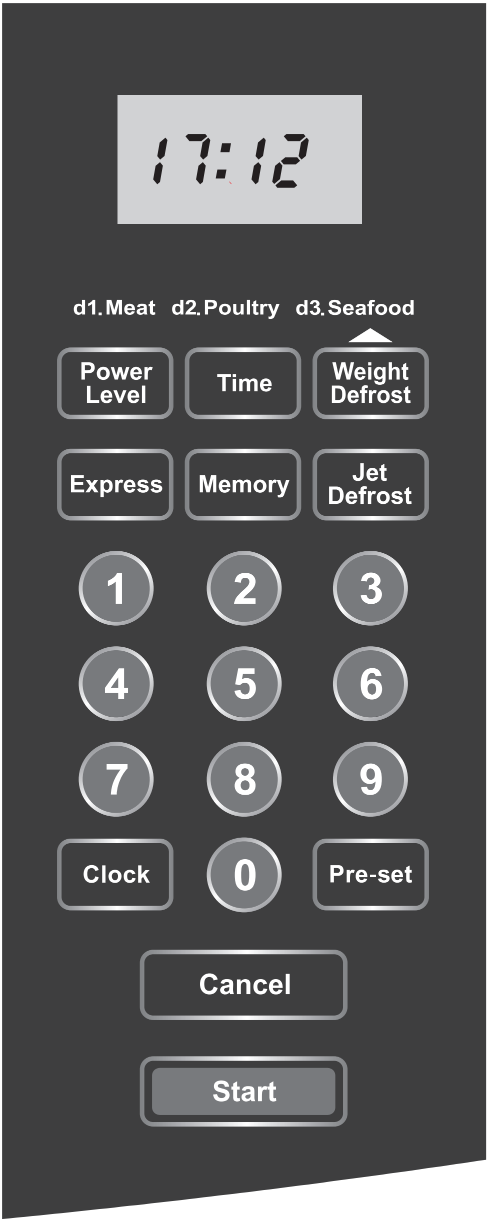

顯示屏
顯示烹調時間、火力、符號和時鐘時間。

火力【Power Level】
用於設置微波烹調火力。

時間【Time】
用於設置烹調時間。

按重量解凍【Weight Defrost】
此解凍程式依據食物的重量和種類，自動選擇適當時間及火力來解凍食物。

快速烹調【Express】
用於快速設置以100%火力烹調。

記憶【Memory】
用於設置多段烹調程式。

快速解凍【Jet Defrost】
此解凍功能依據所設烹調時間來快速均勻解凍食物。

數字鍵
用於設置時間、烹調火力及食物重量。

時鐘【Clock】
用於設置時鐘功能。

預約【Pre-set】
用於先放入食物後指定微波爐在預定時間自動啟動。

取消 (童鎖)【Cancel】
用於取消所設程式及設置童鎖功能。

啟動【Start】
用於啟動烹調程式。

操作說明

時鐘設置

時鐘為12小時制。

舉例：設置時鐘時間為6:00 (上午或下午)。

1. 按【時鐘 Clock】鍵；
2. 按【取消 Cancel】鍵；
3. 按數字鍵設置時鐘時間；
4. 再按【時鐘 Clock】鍵一次確認。

備註：
在烹調過程中，按【時鐘】鍵可查詢當前時鐘時間。

一般烹調

1. 按【火力 Power Level】鍵；
2. 按數字鍵輸入烹調火力，共有11段火力；
3. 按【時間 Time】鍵；
4. 按數字鍵輸入烹調時間，最長可設置99分99秒；
5. 按【啟動 Start】鍵。

按數字鍵	烹調火力 (顯示符號)
1,0	100% (P10)
9	90% (P9)
8	80% (P8)
7	70% (P7)
6	60% (P6)
5	50% (P5)
4	40% (P4)
3	30% (P3)
2	20% (P2)
1	10% (P1)
0	0% (P0)

備註：
在烹調過程中，按【火力 Power Level】鍵可查看當前烹調火力。

快速烹調

此功能可通過按【快速烹調 Express】鍵，選擇4個常用的烹調時間 (15秒、30秒、1分鐘或2分鐘)，微波爐將以100%微波火力烹調食物。

舉例：假設你要用此功能烹調食物1分鐘。

1. 連續按【快速烹調 Express】鍵直至顯示1:00；
2. 按【啟動 Start】鍵。

按重量解凍

只需輸入食物的種類和重量，微波爐會自動選擇解凍時間及火力。

下表為每類解凍食物的最高重量：

食物種類	最高重量	顯示
肉類	2300g	d1
家禽類	4000g	d2
海鮮類	900g	d3

舉例：假設你要設置解凍600克蝦的程式。

1. 將食物放入爐內；
2. 連續按【按重量解凍 Weight Defrost】鍵直至顯示“d3”；
3. 按數字鍵輸入食物重量；
4. 按【啟動 Start】鍵。

備註：
在烹調過程中，程式自動暫停時請翻轉食物，再按【啟動 Start】鍵可繼續烹調。按【啟動】鍵可繼續烹調。

操作説明

快速解凍

只需輸入解凍食物所需時間，最長解凍時間為99分99秒。

舉例：假設你要設置5分30秒的快速解凍程式。

1. 按【快速解凍 Jet Defrost】鍵；
2. 按數字鍵輸入所需解凍時間；
3. 按【啟動 Start】鍵。

備註：
在烹調過程中，程式自動暫停時請翻轉食物，再按【啟動 Start】鍵可繼續烹調。

多段烹調

本微波爐具有將幾種烹調程式組合在一起，進行多段烹調工作的特點。使用者最多可設置三段烹調程式，使烹調更方便。

備註：
快速解凍程式只能設在第一段，而快速烹調和按重解凍不能設在多段烹調程式中。

舉例：假設你要設置以下烹調程式：

① 快速解凍
② 100%火力烹調 (5分鐘)
③ 50%火力烹調 (10分鐘)

步驟：
1. 輸入快速解凍程式；
2. 按【記憶 Memory】鍵；
3. 輸入5分鐘100%火力的烹調程式；
4. 按【記憶 Memory】鍵；
5. 輸入10分鐘50%火力的烹調程式；
6. 按【啟動 Start】鍵。

預約功能

先放入食物，然後可預定微波爐在預約時間(12小時制)自動啟動。

舉例：假設你要預定微波爐在12時啟動10分鐘50%火力的烹調程式。

1. 將食物放入爐內；
2. 按【火力 Power Level】鍵；
3. 按數字鍵輸入烹調火力；
4. 按【時間 Time】鍵；
5. 按數字鍵輸入烹調時間；
6. 按【預約 Pre-set】鍵；
7. 按數字鍵輸入預約啟動時間12:00；
8. 按【啟動 Start】鍵以確認。

備註：
在預約狀態下，按【預約 Pre-set】鍵可查看預約時間，如按【取消 Cancel】鍵可取消此預約程式。

童鎖功能

用來防止兒童在沒有成人指導的情況下使用微波爐。當童鎖功能啟動後，“LOCK” 顯示燈將會亮起，此時微波爐不能操作。

a. 設置童鎖：在待機狀態下，按住【取消 Cancel】鍵三秒後，此時顯示屏顯示 “LOCK”。
b. 解除童鎖：按住【取消 Cancel】鍵三秒後，此時顯示屏 “LOCK” 消失。

清潔與保養

注意

切勿使用強烈洗潔劑、揮發油及金屬刷等粗糙、磨損性的洗滌用品清洗微波爐的任何部分。

清潔說明

1. 清洗爐腔之前，須關閉微波爐，並從插座上拔去電源線插頭。
2. 經常保持爐腔清潔。當食物或湯水濺到爐內壁時，可用濕布擦去。如爐內壁很髒則可使用溫和洗劑，切勿使用粗糙、磨損性的洗劑。
3. 必須經常清潔玻璃盤。可先用溫熱的肥皂水清洗，再用清水洗淨擦乾。
4. 必須經常擦洗轉盤支承和爐腔底面。請用溫和清潔劑清洗爐腔底面，而轉盤支承則可用溫熱的肥皂水洗，清洗後抹乾放回原處。
5. 必須經常清潔爐門的密封面。可先用軟乾布浸肥皂水清洗，再用軟乾布擦淨。
6. 微波爐外表面用軟乾布浸肥皂水清洗後，再用軟乾布擦淨。注意不要讓水滲入爐縫或通風口。
7. 如控制板被弄濕，請用軟乾布抹擦，切勿用粗糙、磨損性的洗劑來擦控制板，擦控制面板時，請將爐門打開，以免誤按操作鍵。
8. 爐內外如有蒸氣凝成的水滴，可用軟布擦淨。
9. 爐內如有異味，可用一杯水加幾匙檸檬汁煮5-7分鐘，即可消除。
10. 若長期不使用微波爐，應拔掉電源插頭，放在通風乾燥、沒有腐蝕性氣體的環境中。
11. 微波爐發生故障，必須聯絡客戶服務部，由本公司專業維修人員檢修。

維修說明

警告：必須由合資格的維修人員執行檢修操作

1. 維修人員在維修微波爐時，必須注意微波輻射。切勿暴露在由微波發生器或其他傳導微波能部件所發出的輻射中。

易被拆掉並可能觸及到250V以上的部件
磁控管、高壓變壓器、高壓電容器、高壓二極體、高壓保險絲。
可導致過度微波洩漏的情況
1. 磁控管沒有被妥當地安裝在波導管上。 2. 沒有妥當地安裝門鉤及將門體固定在上、下鉸鏈上。 3. 開關托架安裝不當。 4. 門、門封、外殼發生損壞。

2. 如需更換爐燈、電源線等，必須採用本公司的專用型號。

常見事故及處理

如果微波爐無法操作，應檢查：

1. 微波爐的插頭是否插妥。若未插好，先把插頭拔離插座，待10秒鐘後再穩定插妥。

2. 檢查電路保險絲是否燒毀，或主要電路保險斷路是否有跳掣，若這些看起來都操作正常，則需使用其他工具檢查插座。

3. 控制台的程式控制是否正確。

4. 爐門是否關好，並啟動童鎖功能。否則微波能量將無法流入爐內。

5. 當爐內無食物，而微波爐被偶然啟動時，請立即打開爐門或按【CANCEL】鍵，停止操作。

若上述所有行動皆無法修正有關情況，則必須聯絡合格專業技術人員。切勿擅自調整或修理。

技術規格 TECHNICAL SPECIFICATIONS

型號 Model	**MVG-1712**
電壓 Voltage	230-240 V, AC, 50 Hz
輸入功率 Power Input	1,200 W
輸出功率 Power Output	700 W
頻率 Frequency	2,450 MHz
機身尺寸 Dimensions	(H) 290 mm (W) 452 mm (D) 315 mm
爐腔尺寸 Cavity Dimensions	(H) 198 mm (W) 315 mm (D) 294 mm
容量 Capacity	17 L
淨重 Net Weight	10.5 kg

產品規格及設計如有變更，恕不另行通知。
Specifications are subject to change without prior notice.

中英文版本如有出入，一概以英文版為準。
If there is any inconsistency or ambiguity between the English version and the Chinese version, the English version shall prevail.

請填妥以下空格並與發票一併保存，以便維修時核對資料。用戶提供本公司之所有資料必須正確無誤，否則免費保用將會無效。

Please fill out the form below. This information and the purchase invoice will be required for any repairs. Warranty will be invalid if information provided is found to be inaccurate.

型號 Model No. : ☐ MVG-1712

機身號碼 Serial No. : ______________________ 發票號碼 Invoice No. : ______________________

購買商號 Purchased From : ______________________ 購買日期 Purchase Date : ______________________

保用條款

此保用提供德國寶產品之機件在正常使用下壹年保用(自購買日起計算)。

* 貴戶須在購機十天內，以下列其中一種方式向本公司登記資料，保用手續方正式生效：

1)填妥本公司網頁內之保用登記表格 **www.germanpool.com/warranty**。
2)填妥保用登記卡，並連同購機發票之副本一併郵寄到客戶服務部 (本公司將不發還發票副本或登記卡)。

1. 未能出示購買發票正本者，將不獲免費維修服務。
2. 用戶應依照說明書的指示操作。本保用並不包括：
   - 上門安裝、檢驗、維修或更換零件之人工以及一切運輸費用；
   - 因天然與人為意外造成的損壞 (包括運輸及其他)；
   - 電源接合不當、不依說明書而錯誤或疏忽使用本機所引致之損壞。
3. 於下列情況下，用戶之保用資格將被取消：
   - 購買發票有任何非認可之刪改；
   - 產品被用作商業或工業用途；
   - 產品經非認可之技術人員改裝或加裝任何配件；
   - 機身編號被擅自塗改、破壞或刪除。
4. 總代理有權選擇維修或更換配件或其損壞部份。
5. 產品一經被轉讓，其保用即被視作無效。

Warranty Terms & Conditions

Under normal operations, the product will receive a 1-year full warranty provided by German Pool (effective starting from the date of purchase).

* This warranty is not valid until Customer's registration information is returned to and received by our Service Centre within 10 days of purchase via one of the following methods:

1) Visit our website and register online: **www.germanpool.com/warranty.**
2) Complete all fields on the attached Warranty Card and mail it back to our Customer Service Centre along with a photocopy of the purchase invoice (Warranty Card and invoice copy will not be returned to Customer).

1. Customer who fails to present original purchase invoice will be disqualified for free warranty.
2. Customer should always follow the operating instructions. This warranty does not apply to:
   - labour costs for on-site installation, check-up, repair, replacement of parts and other transportation costs;
   - damages caused by accidents of any kind (including transport and others);
   - operating failures resulted from incorrect voltage, improper operations and unauthorized installations or repairs.
3. This warranty is invalid if:
   - purchase invoice is modified by unauthorized party;
   - product is used for any commercial or industrial applications;
   - product is repaired or modified by unauthorized personnel, or unauthorized parts are installed;
   - serial number is modified, damaged or removed from the product.
4. German Pool will, in its discretion, repair or replace any defective part.
5. This warranty will be void if there is any transfer of ownership from the original purchaser.

客戶服務部

德國寶(香港)有限公司
香港九龍土瓜灣馬頭角道116號
新寶工商中心高層地下2-4號室

電話：+852 2333 6249
傳真：+852 2356 9798
電郵：repairs@germanpool.com

Customer Service Centre

German Pool (Hong Kong) Limited
Room 2-4, Upper G/F,
Newport Centre, 116 Ma Tau Kok Road,
Tokwawan, Kowloon, H.K.

Tel : +852 2333 6249
Fax : +852 2356 9798
Email : repairs@germanpool.com

此保用證只適用於香港 | This warranty card is valid only in Hong Kong

GERMAN POOL 德國寶

德 國 寶 (香 港) 有 限 公 司 German Pool (Hong Kong) Limited

香港九龍土瓜灣馬頭角道116號新寶工商中心高層地下2-4號室

Room 2 - 4, Upper Ground Floor, Newport Centre
116 Ma Tau Kok Road, Tokwawan, Kowloon, Hong Kong

電話 (Tel)：
+852 2333 6245
+852 2773 2888

傳真 (Fax)：
+852 2765 8215
+852 2365 6009

電郵 (E-mail)：
info@germanpool.com

2009 Superbrands Hong Kong's Choice

2007 CERTIFICATE AWARD FOR THE BEST BRAND ENTERPRISE 具潛質品牌企業

中小企業 最佳拍檔大獎

HONG KONG CONSUMERS CHOICE 2007

HK Q

香港卓越名牌 HONG KONG PREMIER BRAND

© 版權所有。未獲德國寶授權，不得翻印、複製或使用本説明書作任何商業用途，違者必究。
© All rights reserved. Copying, reproducing or using the contents of this manual is not allowed without prior authorization from German Pool, violators will be prosecuted.

www.germanpool.com